Journal of
Marine Science and Technology

Volume 2 | Issue 1 Article 6

Analysis of Three-Dimensional Pile Groups

M.T. Liang
Department of Harbor and River Engineering National Taiwan Ocean University Keelung 20224, Taiwan, Republic of China

Y. Liu
Department of Harbor and River Engineering National Taiwan Ocean University Keelung 20224, Taiwan, Republic of China

Recommended Citation

Liang, M.T. and Liu, Y. (1994) "Analysis of Three-Dimensional Pile Groups," *Journal of Marine Science and Technology*: Vol. 2: Iss. 1, Article 6.
DOI: 10.51400/2709-6998.2487
Available at: https://jmstt.ntou.edu.tw/journal/vol2/iss1/6

Journal of Marine Science and Technology. Vol. 2, No. 1, pp. 47-52 (1994)

ANALYSIS OF THREE-DIMENSIONAL PILE GROUPS

M.T. Liang and Y. Liu

Department of Harbor and River Engineering
National Taiwan Ocean University
Keelung 20224, Taiwan, Republic of China

Key words: analysis, interaction, pile, reaction, stiffness.

SUMMARY

A numerical technique is presented in the analysis for loading behavior of general three-dimensional pile groups. The striking characteristics of the pile-group model may include raked pile, different pile sizes, non-uniform pile sections, soil inhomogeneit y, soil nonlinearity, and pile-soil-pile interaction. A typical six-pile group is analyzed and the results are compared with that obtained by four other computer programs that are based on different approaches. The computed solutions are shown to have reasonally good agreement with the measured values.

INTRODUCTION

There are many numerical methods which are now available for the analysis of reactions of pile groups. For instance, Banerjee and Davies [1] developed a PGROUP program by using a boundary element method. This program is a nonlinear method of analysis in which volume cells were introduced in to the soil domain to handle soil yielding. Poulos [2] wrote a DEFPIG program using a simplified boundary element method for the single pile analysis and calculation in which the interaction factors for two equally loaded identical piles are considered. Soil nonlinearity is equivalent to limiting the stresses at the pile-soil interaction, whereas soil inhomogeneity is approached with an averaging procedure using the point-load solutions of Mindlin [3]. Randolf [4] assumed that soil behavior is linear elastic. The PIGLET program developed by Randolf is based on analytical solutions that are either derivatived theoretically or fitted to finite element results to give the response of single pile. Pile-soil-pile interaction is based on interaction factors determined from expressions fitted to the results of finite element analysis. Chow [5] directly considered pile-soil-pile interaction effects utilizing Mindlin's solution [3] for the analysis of the general three-dimensional pile group model.

This paper describes a method of analysis that combines the striking features in the general three-dimensional pile group model of Reese, *et al* [6] and O,Neill, *et al* [7]. The numerical process for three-dimensional pile-group analysis is useful for vertical pile groups subjected to axial and lateral loads. The accuracy of this suggested method is evaluated by comparing the approach with some computer096 proprams available for pile-group analysis for the performance of a typical battered pile group.

ANALYTICAL METHOD

Typical limitations in most methods for analyzing three - dimensional , batter - pile foundations are: (1) The structural pile cap is completely rigid, and (2) Axial, lateral, and total reactions to load are obtained by the principle of superposition. Fig. 1 shows a hypothetical structure supported by batter pile.

The superstructure is called the" general structure Cartesian coordinate system "(X, Y, Z) with external load acting on the superstructure at the origin of that coordinate system. The coordinate of a particular pile-head (or pile-structure joint) are (X_i,Y_i,Z_i). Each pile is further called a" local structure coordinate system" (X_i','Y_i',Z_i'). The orientation of each pile with reference to the local structure coordinate system is given by the direction angles ξ, λ and ω. An additional coordinate system, designated the "pile coordinate system "(u, v, w) is established as shown in Fig. 2. In the orthogonal system the u-axis is coincident with the longitudinal axis of the pile and is positive downward, while the w-axis is

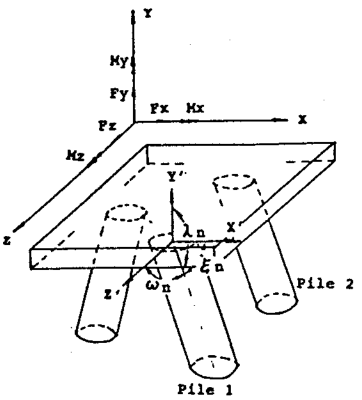

Fig. 1. Ahypothetical structure supported by batter pile.

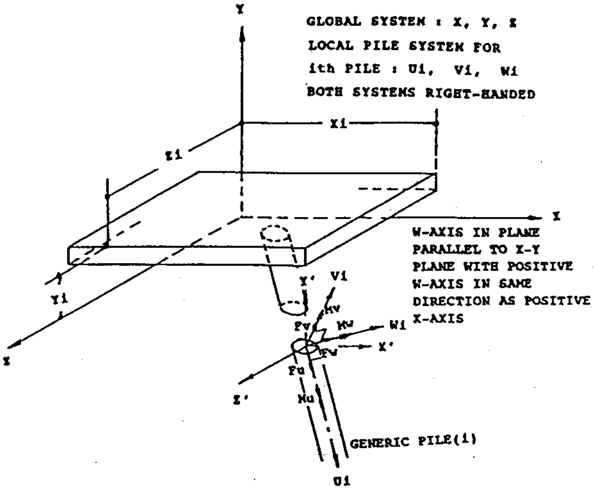

Fig. 2. Golbal and local cartesian coordinate system.

fixed in the $X_i' - Y_i'$ plane and the v-axis is pointed away from the reader.

Let Ui= reaction transformation matrix for pile i then the reaction forces and moments {Fu, Fv, Fw, Mu, Mv, Mw}$_i$ in the u, v and w direction at joint i are first transformed into a vector {Fx, Fy, Fz, Mx,My,Mz}$_{(i)}$ with reference to the general structure coordinate system by the following matrix relationship (see Reese *et al* [6])

$$U_i F_i = F_{(i)} \tag{1}$$

At present, it is hoped that a transformation be developed from the structure movement vector {ΔX, ΔY, ΔZ, αX, αY, αz} to the joint movement vector {δU, δV, δW, αU, αV, αW)$_i$. The notation Δ and δ indicate translations in the subscripted direction, while α indicates rotation about the subscripted axis. This transformation can be represented as

$$T_i A = \delta_i \tag{2}$$

where Ti= deformation transformation matrix for pile i, A= structure movement vector, and δι= φοιντ move-ment vector at pile i. By the relationship in geometry, one may obtain the following equation

$$T_i = U_i^T \tag{3}$$

Eq. (3) is valid for small displacement. Fig. 3 shows four modes of pile-head movement for establishing a stiffness relationship between reaction and movement of a single pile head. This relation can be expressed in matrix for as

$$\begin{pmatrix} c_5 & 0 & 0 & 0 & 0 & 0 \\ 0 & c_1 & 0 & 0 & 0 & c_2 \\ 0 & 0 & c_1 & 0 & -c_2 & 0 \\ 0 & 0 & 0 & c_6 & 0 & 0 \\ 0 & 0 & -c_2 & 0 & c_4 & 0 \\ 0 & c_3 & 0 & 0 & 0 & c_4 \end{pmatrix}_i \begin{pmatrix} \delta u \\ \delta v \\ \delta w \\ \alpha u \\ \alpha v \\ \alpha w \end{pmatrix}_i = \begin{pmatrix} Fu \\ Fv \\ Fw \\ Mu \\ Mv \\ Mw \end{pmatrix}_i \tag{4}$$

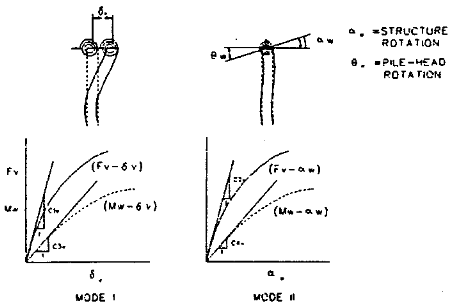

(a) LATERAL BEHAVIOR MODES WITH RESPECT TO Iw

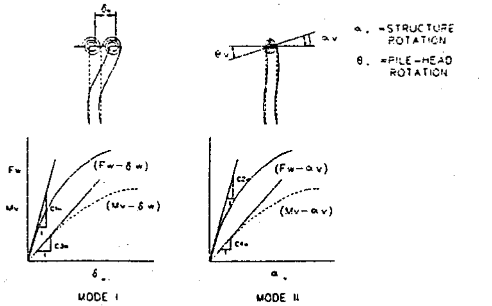

(b) LATERAL BEHAVIOR MODES WITH RESPECT TO Iv

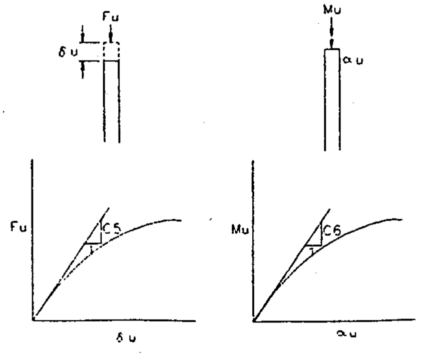

(c) MODE III (AXIAL) (d) MODE IV (TORSIONAL)

Fig. 3 Response foundation for pile-head (ater O'Neill *et al* (1997)).

Eq. (4) is stated more concisely as

$$S_i \delta_i = F_i \tag{5}$$

where Si =pile-head stiffness matrix. The structure stiffness matrix can be obtained from Eqs. (2), (3) and (5) as

$$F_{(i)} = U_i S_i T_i A \tag{6}$$

For equilibrium of the superstructure

$$\sum_{i=1}^{N} F_{(i)} = F \tag{7}$$

where N= pile number and F= vector of applied forces and moments.
Let

$$R_i = U_i S_i U_i^T \tag{8}$$

and define the structure stiffness matrix

$$R = \sum_{i=1}^{N} R_{(i)} \tag{9}$$

then the force-deformation relationship of the entire system can be written as

$$F = RA \tag{10}$$

The problem of three - dimensional grouped piles thus reduces to solve Eq. (10) for A. The F-vector is known, and R, a 6x6 matrix, can easily be calculated by taking the algebraic sum of the Ri matrices.

COMPUTATIONAL PROCEDURE

The numerical procedure of Reese, *et al* [612] was improved by O'Neill, *et al* [7] through the incorporation of pile-soil-pile interaction effects utilizing Mindlin's solutions [3]. The computational procedure is illustrated in Fig. 4. In order completel y to compute the additional displacement, the original noninteractive unit soil reaction relationships should be modified as shown in Fig. 5. Let d_{uIi} is the total additional displacement of the soil around the I_{th} node parallel to the axis, and δ_{uIi} be the axial displacement of the pile at the same point obtained from the noninteractive analysis, then a factor Z_{Ii} is computed for each end node on the I_{th} pile and is written as

$$Z_{Ii} = \frac{d_{uIi} + \delta_{uIi}}{\delta_{uIi}} \tag{11}$$

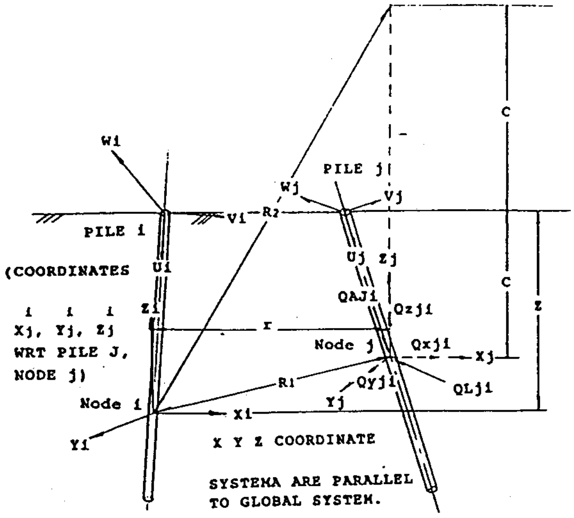

Fig. 4. Coordinate system for computing added displacement at pile I, node i.

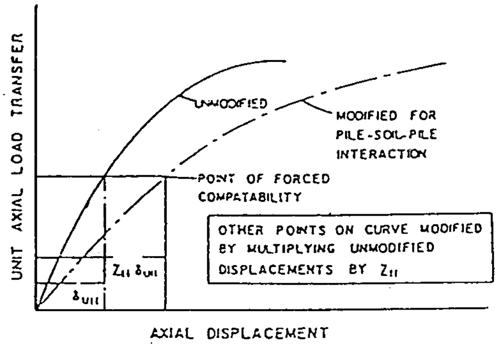

Fig. 5. Modification of unit axial soil resistane relationship for group effects at pile I, node i.

eq.(11) was built assuming d_{uIi} and δ_{uIi} being in the same direction. However, if the two displacements are in opposite directions and the absolute value of d_{Ii} equals or exceeds that of δ_{Ii}, then the modifier becomes

$$Z_{Ii} = \frac{|\delta_{uIi}|}{|\delta_{uIi}| + |d_{uIi}|} \tag{12}$$

EXAMPLE PROBLEM

Fig.6 illustrates the pile-group configuration which indicates a model test on a battered pile group subjected to a combined vertical load of 222 N and a horizontal load of 138 N in fine, fairly uniform sand (see Davisson and Sally [14] and Chow [5]). The aluminum pipe pile has an outer diameter of 12.7 mm with 0.8 m wall thickness, and an embedded length of 533 mm.

In order simply to analyze, the pile cap is assumed

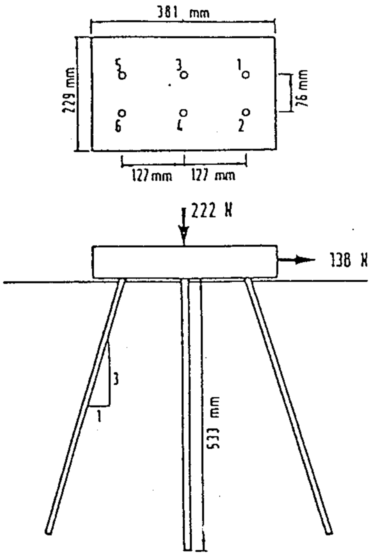

Fig. 6. Details of pile group model.

to be rigid and is permitted rotation. The soil Young's modulus is assumed to vary linearly with depth, and is taken to be 19,000 kpa/m. The Poisson's ratio of the soil is assumed to be 0.3.

The analytical procedure has been programmed by the digital computer. Its utility and the significance of three-dimensional geometry and pile-soil-pile interaction are demonstrated in a practical example mentioned earlier. Given parameters: (1) external forces are listed in Table.1 and Fig. 6. (2) The response module of piles (Assume that all the pile have the same values.) are shown in Table. 2. (3) The coordinates and orientations of piles are presented in Table. 3. The units of position are meter. The results of numerical calculation for this example are shown in Table. 4, 5 and 6. To illustrate in more detail, the results (Fig. 7-12) presented by three-dimensional coordinates are expressed that the grouped pile the variation of displacement and rotation in X, Y and Z direction.

The computed horizontal deflection of 0.24 mm is in good agreement with the measured value of 0.23 mm. Table.7 summarizes the measured and computed moments, shear, and axial loads at the pile heads, as well as solutions from Chow [5], PGROUP (Banerjee and Davies [1]) and PIGLET (Randolph [4]). There is a general agreement among the four theoretical approaches and the measured results in terme of relative magnitudes of the moments and loads, but the trends of the moment/load distributions differ somewhat.

DISCUSSION

The computational results in this study reveal several important facts which are shown as follows.

1. Compared with external force induced moment,

Table 1. applied loads

Fx	0	N
Fy	-222	N
Fz	138	N
Mx	0	NM
My	0	NM
Mz	0	NM

Table 2. The response modulus of piles

PILE NO	c_1 kN/M	c_2 kN/M	c_3 kN/M	c_4 kN/M	c_5 kN/M	c_6 kN/M
1	35.0	1750.0	1750.0	3500.0	87.5	5250.0
2	35.0	1750.0	1750.0	3500.0	87.5	5250.0
3	35.0	1750.0	1750.0	3500.0	87.5	5250.0
4	35.0	1750.0	1750.0	3500.0	87.5	5250.0
5	35.0	1750.0	1750.0	3500.0	87.5	5250.0
6	35.0	1750.0	1750.0	3500.0	87.5	5250.0

Table 3. The coordinates (unit:M) and orientation of eachpile

Pile No	X	Y	Z	alpha	batter
1	.038	.0	.127	.0	3.0
2	-.038	.0	.127	.0	3.0
3	.038	.0	.0	.0	100.0
4	-.038	.0	.0	.0	100.0
5	.038	.0	-.127	.0	3.0
6	-.038	.0	-.127	.0	3.0

Table 4. The foundation displacements and rotation in X, Y, Z direction

x=	.017882	alpha x=	-.002718
y=	-.071116	alpha y=	-.000387
z=	-.020350	alpha z=	-.000849

Table 5. The foundation displacement, rotation, force, and moment in u, v, w direction

pile	Δu	Δv	Δw	αu	αv	αw
1	.4159	.0283	-.0349	-.0014734	.0047793	-.0137912
2	.4156	.0285	-.0348	-.0014734	.0047793	-.0137912
3	.4073	.0283	.0988	.0029633	.0047793	-.0135949
4	.4070	.0285	.0988	.0029633	.0047793	-.0135949
5	.4194	.0283	-.0353	-.0014737	.0047793	-.0137972
6	.4191	.0285	-.0325	-.0014734	.0047793	-.0137912
pile	Fu	Fv	Fw	Mu	Mv	Mw
1	36.39	-23.14	-9.59	-7.743	77.83	1.21
2	36.36	-23.14	-9.58	-7.743	77.63	1.61
3	35.64	-22.72	-4.91	15.563	-156.12	2.06
4	35.61	-22.71	-4.91	15.563	-156.12	2.45
5	36.70	-23.14	-9.60	-7.743	78.49	2.21
6	36.67	-23.14	-9.59	-7.743	78.29	1.61

Table 6. Individual pile force components and checking sum of forces along

pile no	Fx	Fy	Fz	Mx	My	Mz
1	2.414	-37.555	23.145	3.473	7.149	-79.260
2	2.408	-37.525	23.137	3.844	9.032	-76.206
3	-4.907	-35.641	22.722	2.059	-16.421	154.766
4	-4.907	-35.609	22.714	2.453	-14.694	157.474
5	2.499	-37.850	23.145	-6.103	6.525	-79.926
6	1.493	-37.820	23.137	-5.725	8.409	-76.849
	.000	-222.00	138.00	.000	.000	.000
	(.000)	(-222.00)	(138.00)	(.000)	(.000)	(.000)

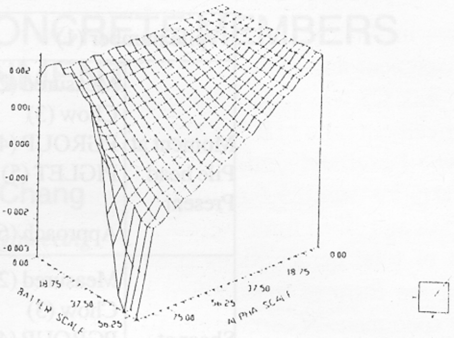

Fig. 10. The fonudation rotation in X-direction.

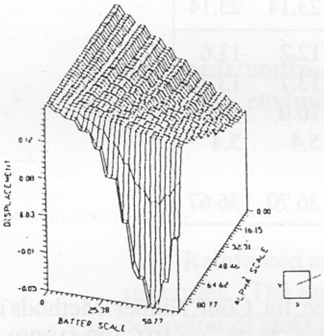

Fig. 7. The foundation displacement in X-direction.

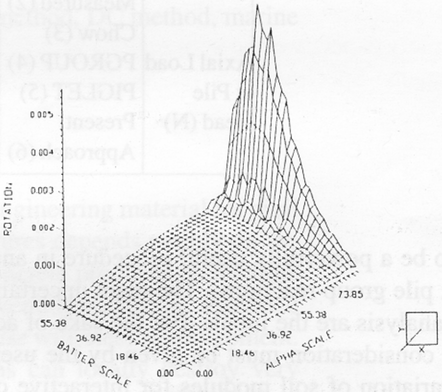

Fig. 11. The foundation rotation in Y-direction.

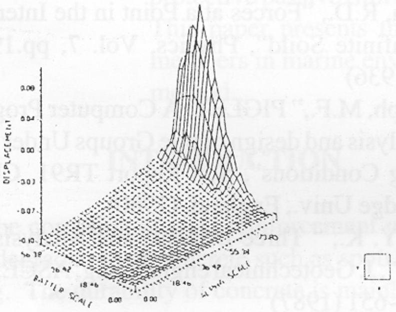

Fig. 8. The foundation displacement in Y-direction.

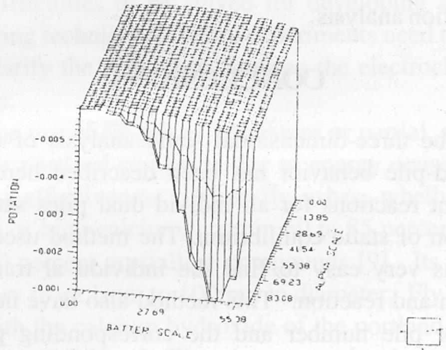

Fig. 12. The foundation rotation in Z-direction.

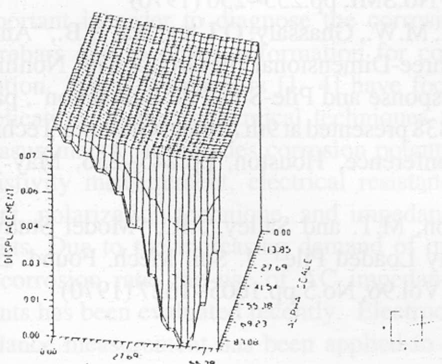

Fig. 9. The foundation displacement in Z-direction.

there are 5×10^{-6}% and 1×10^{-6}% errors for computational moment in X- and Y- direction, respectively, due to computer selection and justification. However, these errors are allowable.

2. In practice, the pile cap is flexible rather than rigid. It needs further studying to consider the effect of pile- cap flexibility.

3. The method developed in this paper has been

Table 7. Comparison with Model Test Results

pile number (1)		1	2	3	4	5	6
	Measured (2)	1.30	1.27	1.20	1.18	1.49	1.22
	Chow (3)	1.55	1.55	1.36	1.36	1.53	1.53
Moment at	PGROUP (4)	1.06	1.26	1.13	1.13	1.23	1.23
Pile head	PIGLET (5)	1.18	1.17	1.17	1.17	1.55	1.55
Present							
	Approach (6)	1.21	1.61	2.06	2.45	1.21	1.61
	Measured (2)	22.2	23.1	16.9	16.0	25.1	16.9
	Chow (3)	20.0	20.0	16.1	16.1	19.0	19.0
Shear at	PGROUP (4)	16.5	16.5	17.3	17.3	18.7	18.7
Pile Head	PIGLET (5)	14.4	14.4	14.1	14.1	19.6	19.6
Present							
	Approach (6)	23.14	23.14	22.72	22.71	23.14	23.14
	Measured (2)	80.1	56.9	28.9	24.0	12.2	13.6
	Chow (3)	63.5	63.5	38.2	38.2	13.7	13.7
Axial Load	PGROUP (4)	68.1	68.1	36.5	36.5	10.0	10.0
at Pile	PIGLET (5)	73.8	73.8	34.6	34.6	5.4	5.4
Head (N)	Present						
	Approach (6)	36.39	36.36	35.64	35.61	36.70	36.67

shown to be a powerfully useful procedure in analyzing complex pile group reactions. The main uncertainties in such an analysis are the inputs. For the sake of accuracy rigorous consideration must be given by the user to set up the variation of soil modules for interactive calculations and until soil resistance curves that are representative of the site and loading conditions the calculation should never be stopped. Straight choice of these inputs is not always straight forward; hence, the method should be used solely by those with experience in soil-structure interaction analysis.

CONCLUSIONS

The three-dimensional static analysis of offshore grouped-pile behavior has been described herein. The resultant reactions for all individ dual piles satisfy the equation of static equilibrium. The method used in this paper is very easy to find the individu al translation, rotation and reaction. This method also have no limitation for pile number and the corresponding position. Hence this procedure is a very useful engineering tool and a crucial valuable instrument for analysis of grouped-pile (include latter) foundation design.

REFERENCES

1. Banerjee, P.K., and Davies, T.G., "Analysis of Some Reported Case Histories of Laterally Loaded Pile Groups", Proc. Int. Conf. Numer. Methods in Offshore Piling, London, U. K., pp.101-108 (1980)
2. Poulos, H.G.. "An Approach for the Analysis of Offshore Pile Groups". Proc. Int. Conf. Numer. Methods. In Offshore Piling, London, U.K. pp.119~126 (1980)
3. Mindlin, R.D., "Forces at a Point in the Interion of a Semi-Infinite Soild", Physics, Vol. 7, pp.195~202, May, (1936)
4. Randolph, M.F.," PIGLET: A Computer Program for the Analysis and design of pile Groups Under General Loading Conditions", Soil Report TR91, CUED/D. Cambridge Univ., England, (1980)
5. Chow, Y. K., " Three-Dimensional Analysis of Pile Groups", J. Geotechnical engineering, ASCE, 113(6), pp.637~651 (1987)
6. Reese, L.C., O'Neill, M.W. and Smith, R.E., "Generalized Analysis of Pile Foundations", Journal of the soil Mechanics and Foundations Division, ASCE, Vol.96, No.SMI, pp.235~250 (1970)
7. O'Neill, M.W., Ghassaly, O.I. and Ha, H.B., "Analysis of Three-Dimensional Pile Groups with Nonlinear Soil Response and Pile-Soil-Pile Interaction", paper OTC 2838 presented at 9th Annual Offshore Technology Conference, Houston, pp.245~256, May 2-5, (1997)
8. Davisson, M.T. and Salley, J.R., "Model Study of Laterally Loaded Pile", J. Soil Mech. Found. Div., ASCE, Vol.96, No.5,pp.1605~1627 (1970)